Q8 Meeting - PROCID

James Oldham
P1 Technology Ltd

Focused Basic Design Brief: Urine collector

Collect first 15ml part of urine sample
Discard all excess urine
Design initially for male patient
Use standard parts where possible

Concept Design

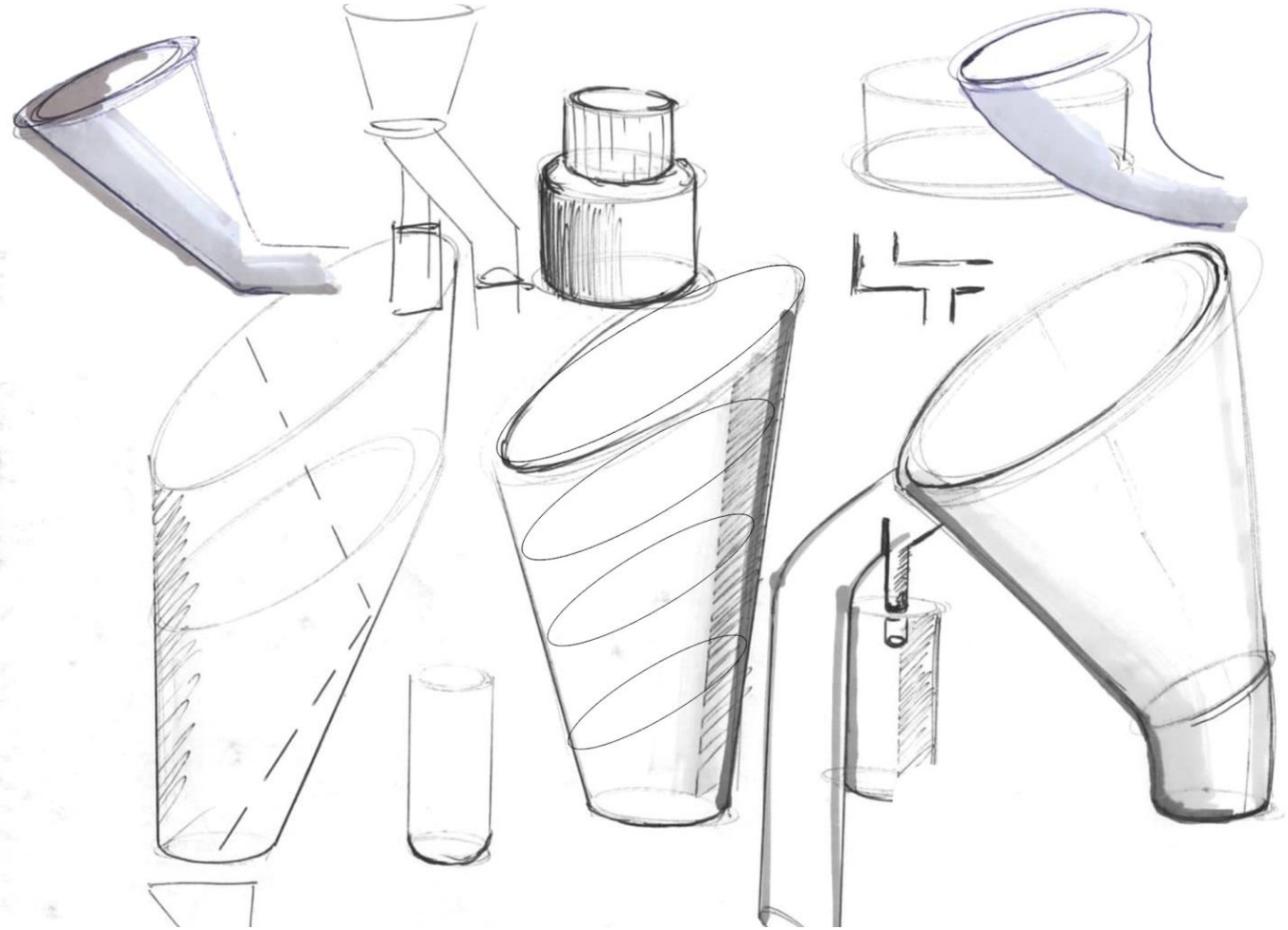

The initial ideas based on collecting urine sample from the male patient:

Concepts to aid patient take sample.

Considerations:

Size of sample bottle
Spillage
Aim
Velocity

Concept Design

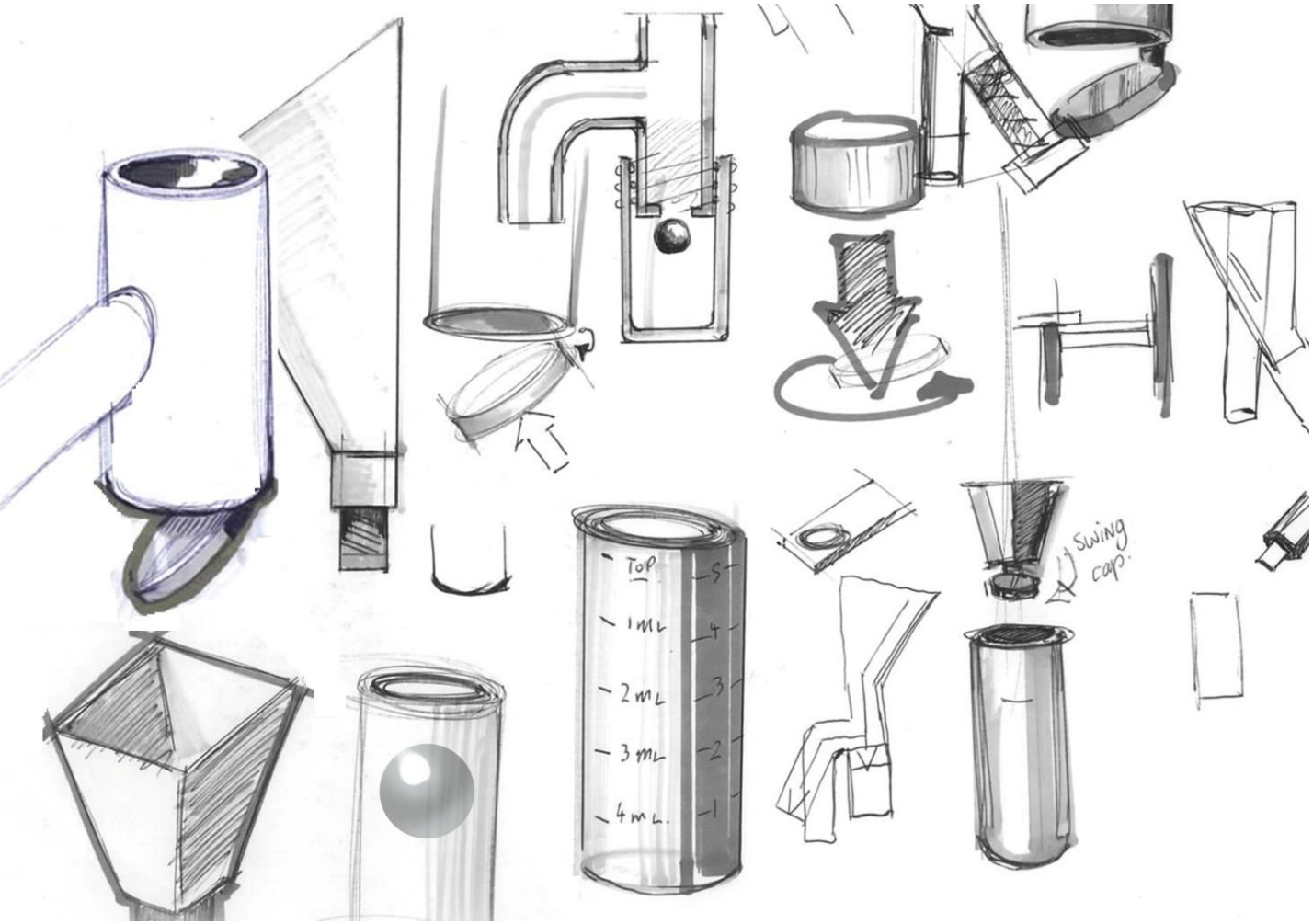

The ideas

Hinge, flap, float, stop, block, slide, divert,

Concept sketches to consider ideas to aid patient take sample.

Concept Design

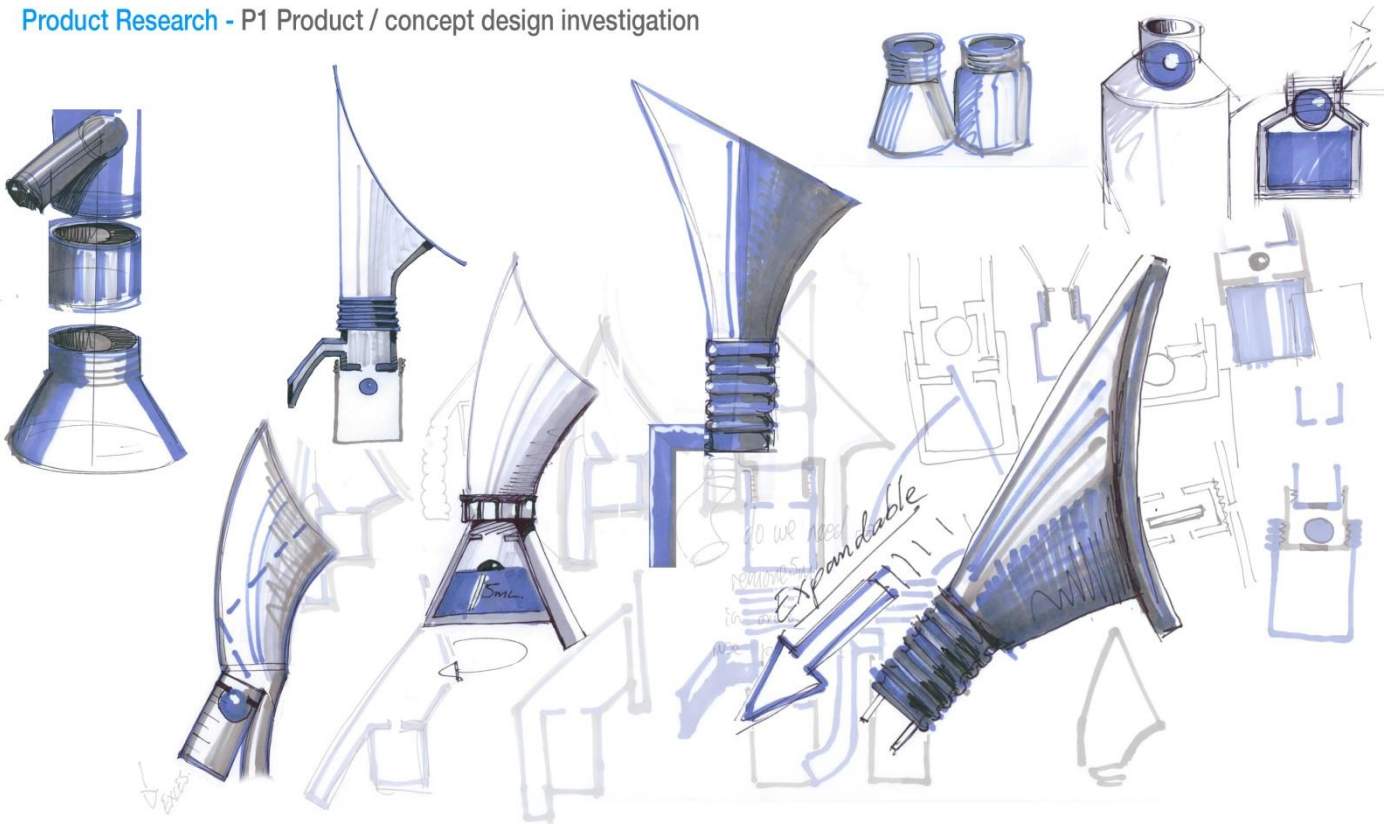

The ideas

Ideas generated to explore.

We liked the idea of using a ball as a seal.

Concept Design

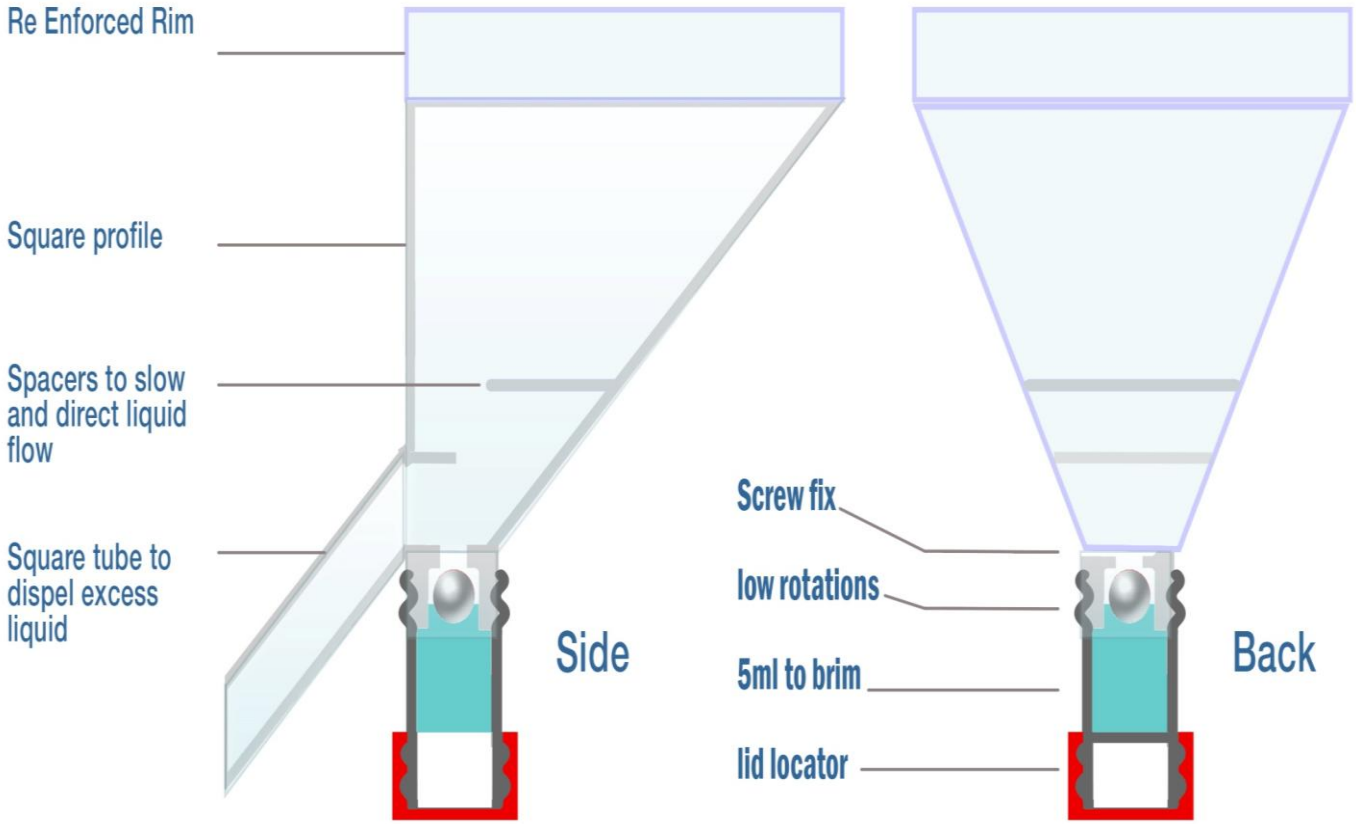

Refining initial ideas

One of the first formalised sketches for the sample collector.

3D CAD Design

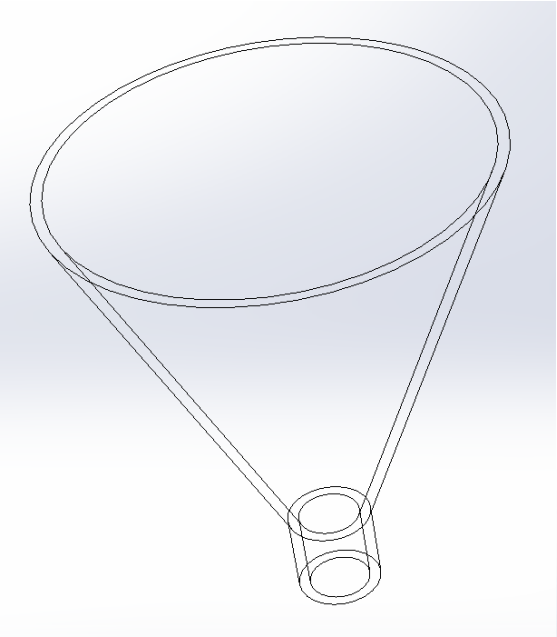

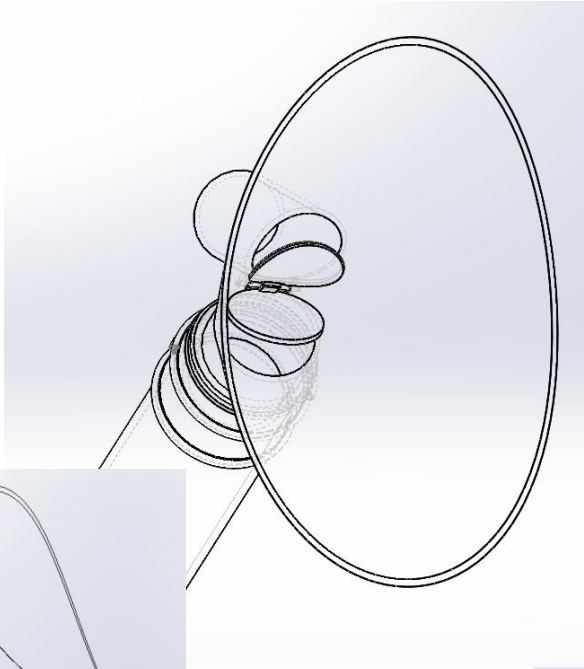

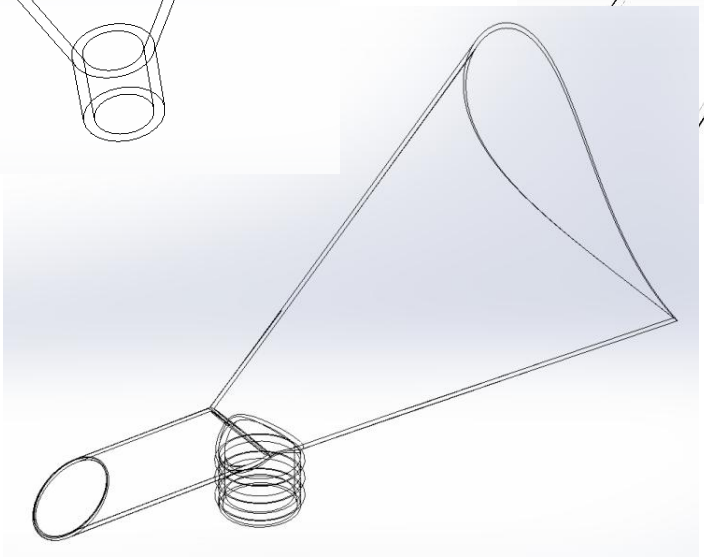

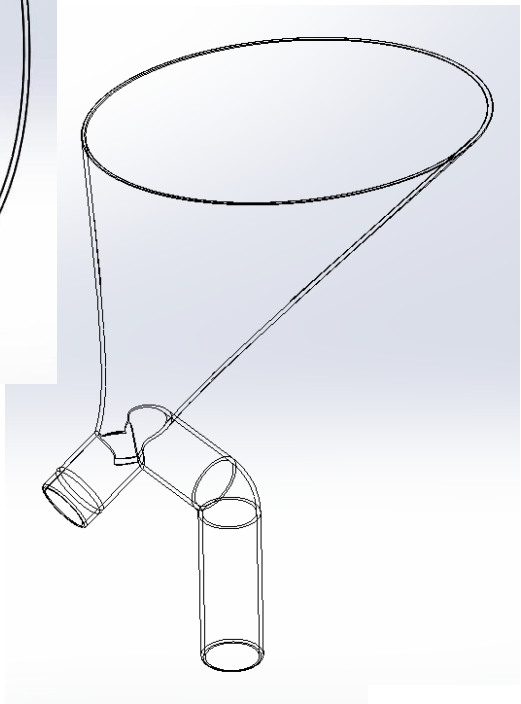

3D CAD Design

Developing 3D CAD models and exploring the initial ideas

3D CAD Design

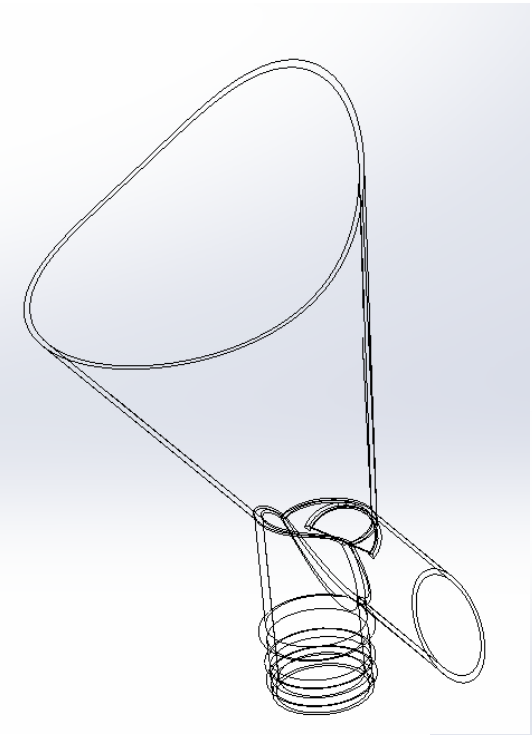

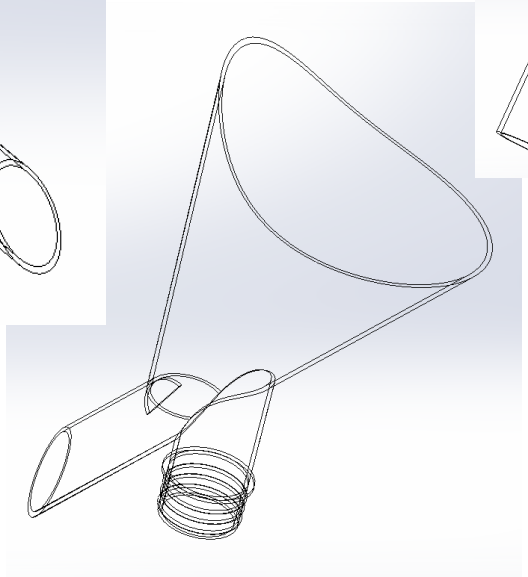

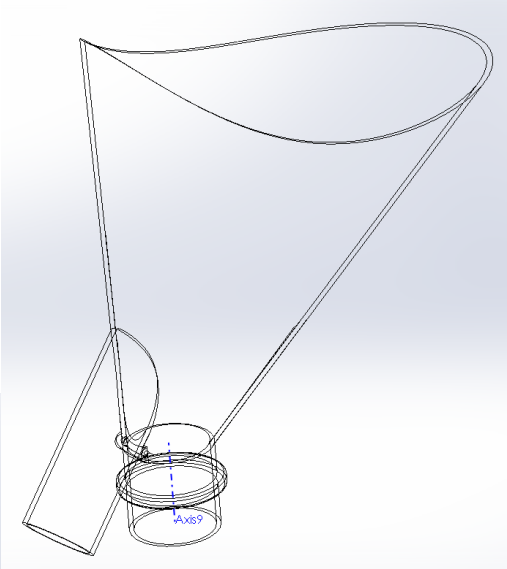

3D CAD Design

Developing 3D CAD models and exploring the initial ideas

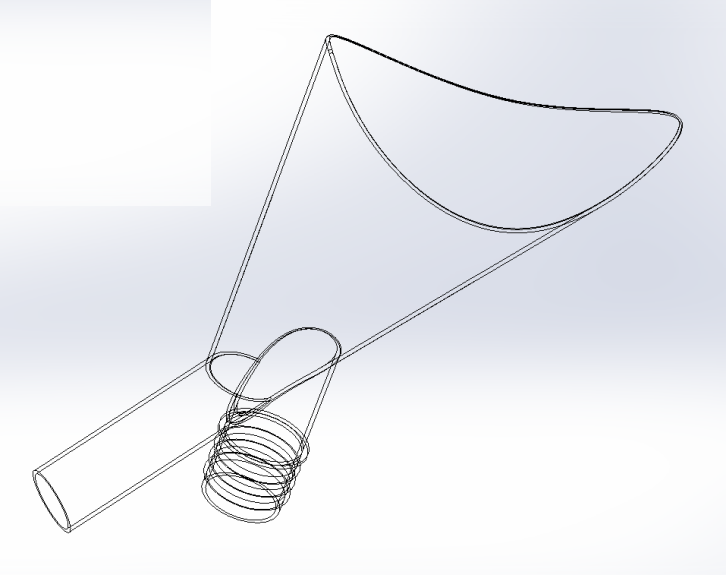

Prototyping

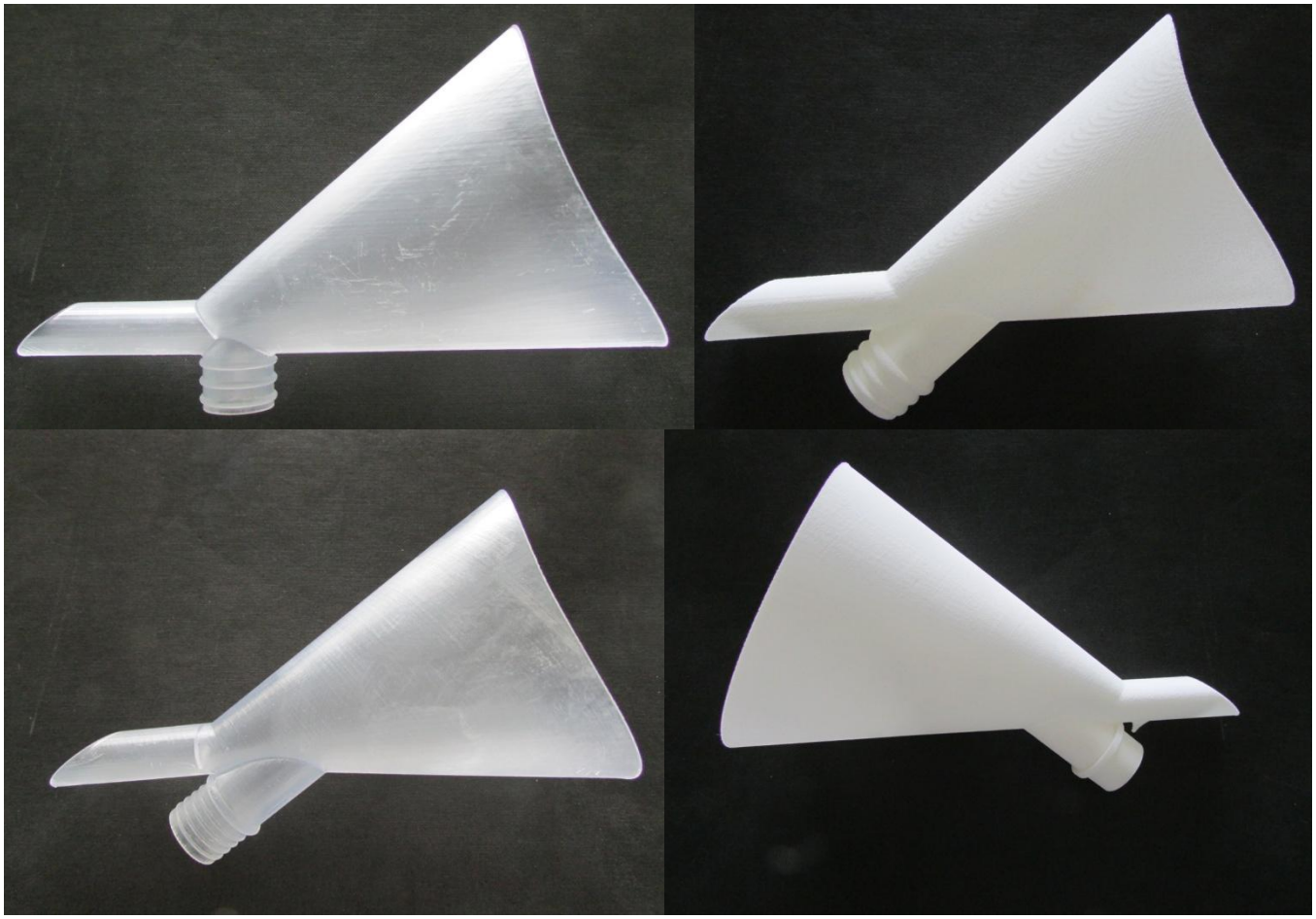

Testing

At set points in the concept design stage prototype models where made to check various aspects of the design exploration process

Design and Manufacturing

Option 1

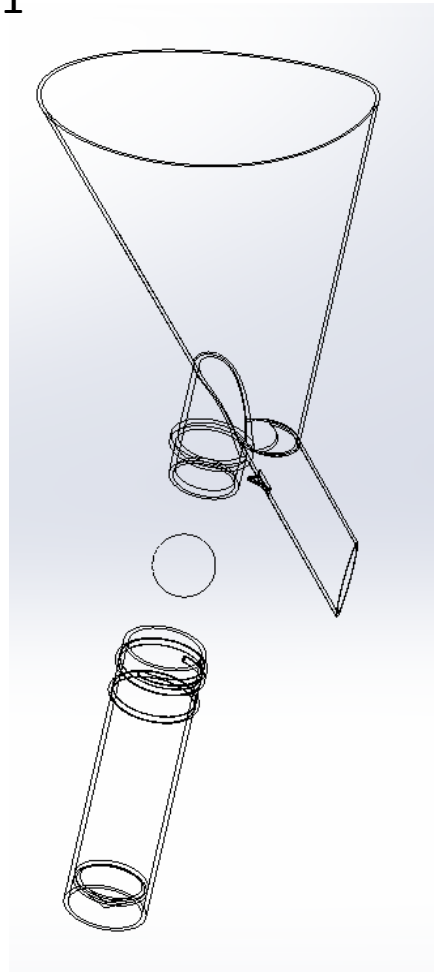

Option 2

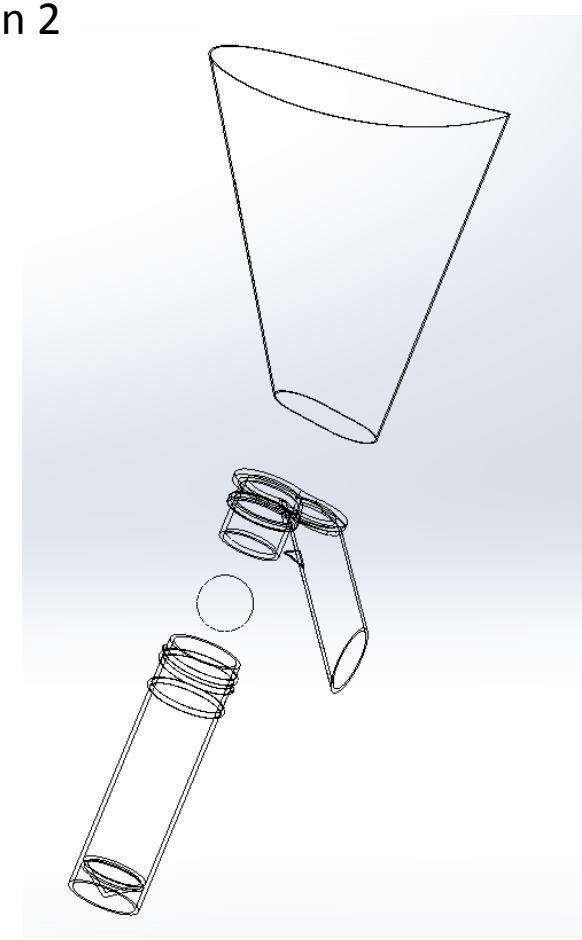

Manufacture

Investigating various options for the manufacture of the Urine Collector with the help of the Amies Team

Design and Manufacturing

Thickness of thread tab

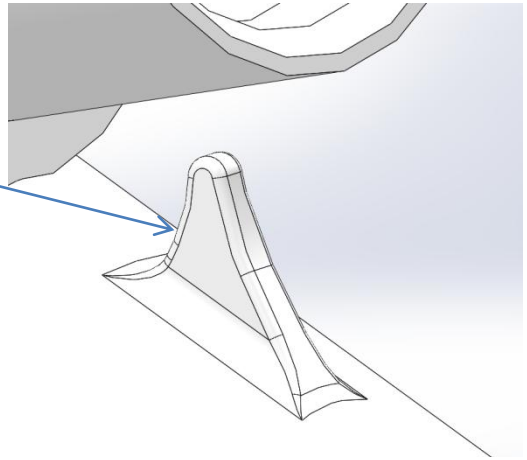

Manufacture

Investigating various options for the manufacture of the Urine Collector with the help of the Amies Team

Wall Thickness of funnel

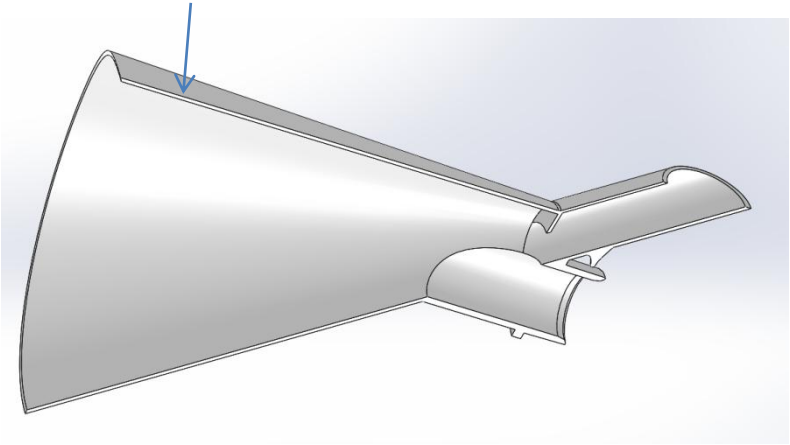

Position of internal deflector

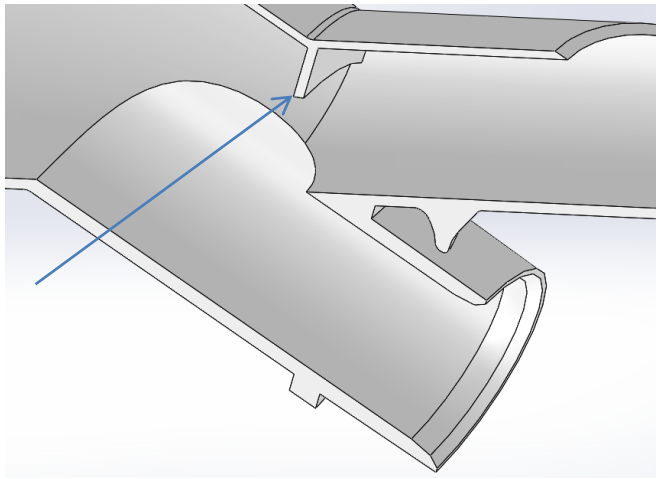

Design and Manufacturing

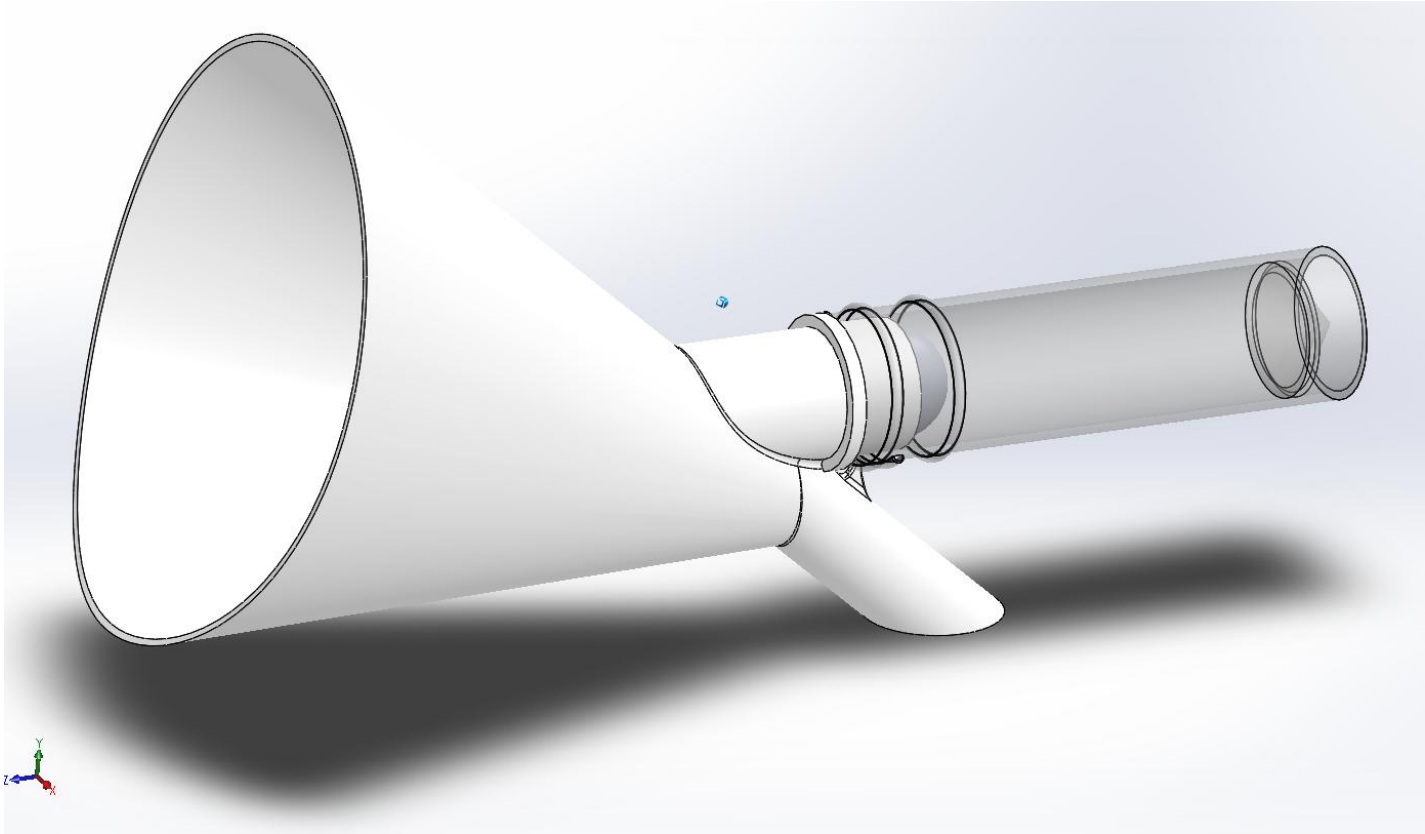

Manufacture

Investigating various options for the manufacture of the Urine Collector with the help of the Amies Team

Next Steps

Research

Investigation via ethically approved clinical trails.

Sample testing to optimise the design

Investigate Other possible uses

Manufacturing routes

Marketing partner

Next Steps

Amies to Manufacture for clinical trials
QA standard EN13485 Manufacture of medical devices

Initial Cost for manufacture:
Tooling: £20,000 - £30,000
Collector: £0.56
Plastic Ball: £0.38
Sample Bottle: £0.29
Packaging: £0.12
Assembly: £0.40
Sub total cost per pack = £1.75
Tooling costs to be atomised over 100,000 units
Total £2.05 per pack

Next Steps

Potential funding
Manufacturing
Clinical trails
Potential routes to market
Partnering with distributors / investors